MOD.	DZ
MISURA *SIZE*	2
FLANGE *FLANGES*	2

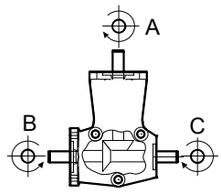

Rapp. *Ratio*	Entrata *In*	Uscita *Out*	Modello *Model*	Peso *Weight*
1/1	A	B	DZ 20S–2FAB–	Kg 1.1
1/1	A	C	DZ 20FS2FAC–	
1/2	A	B	DZ 22S–2FAB–	
1/2	A	C	DZ 22FS2FAC–	
1/1	A	B – C	DZ 21– –2FABC	Kg 1.2
1/2	A	B – C	DZ 23– –2FABC	

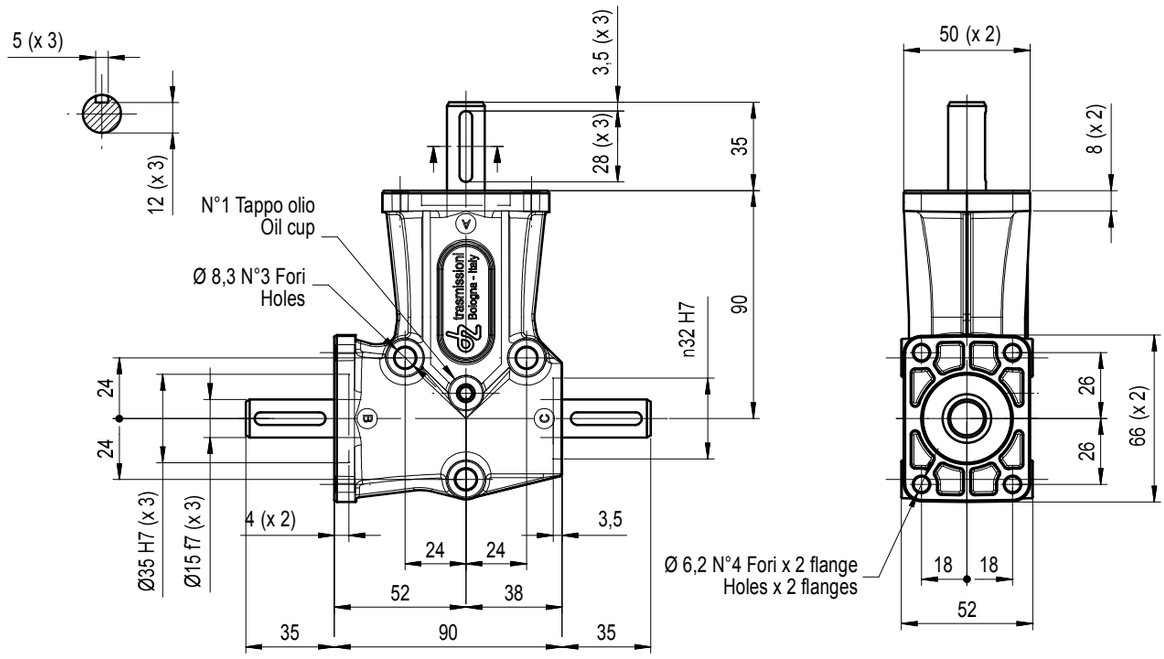

MOD.	DZ
MISURA *SIZE*	2
FLANGE *FLANGES*	3

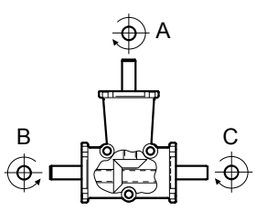
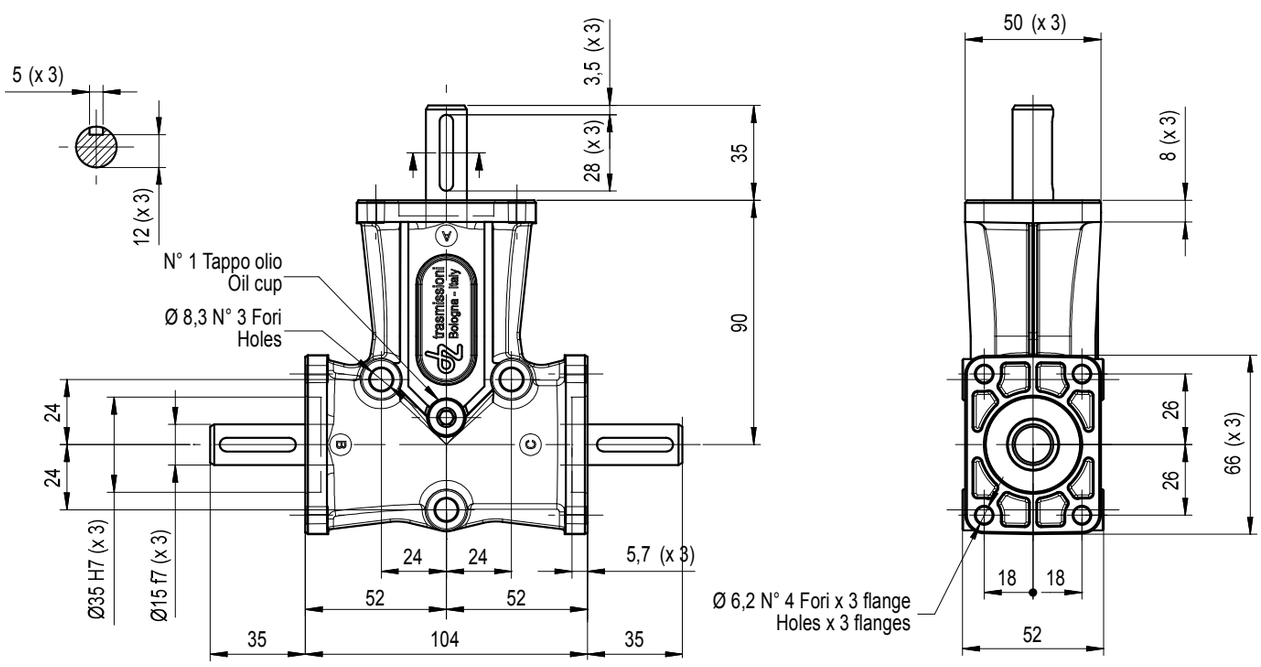
Rapp. *Ratio*	Entrata *In*	Uscita *Out*	Modello *Model*	Peso *Weight*
1/1	A	B	DZ 20S–3FAB–	Kg 1.1
1/1	A	C	DZ 20FS3FAC–	
1/2	A	B	DZ 22S–3FAB–	
1/2	A	C	DZ 22FS3FAC–	
1/1	A	B – C	DZ 21– –3FABC	Kg 1.2
1/2	A	B – C	DZ 23– –3FABC